FC7710

Direct-conversion Wireless Transceiver IC for 800MHz Cellular CDMA

DESCRIPTION

FC7710 is a single-band cellular CDMA RF-to-baseband transceiver IC of FCI's zipRF™ family. It is a highly integrated chip working with a single 3.0V power supply. Because zero-IF architecture is used for FC7710, additional components such as bulky IF SAW filters and other IF matching components are no longer required. 3-wired serial-to-parallel interface (SPI) protocol enables FC7710 operate in various modes. FC7710 contains complete single-band receiver path such as LNA, down-conversion mixer, channel selection filter (CSF), Rx VCO, Rx PLL, and LO distribution block. FC7710 also contains complete transmitter path such as baseband amplifier, up-converter, RF variable-gain block, drive amplifier, Tx VCO, Tx PLL, and LO distribution block. FC7710 is available in 6 x 6mm 48-pin QFN package.

FEATURES

- Complete transceiver for Cellular CDMA
- Low noise and highly linear LNA, mixer, and CSF for cellular CDMA
- Low noise, highly linear, wide dynamic range transmitter with baseband amplifier, up-converter, drive amplifier
- Automatic DC-offset calibration, filter calibration, VCO calibration
- Fully integrated low phase noise Rx, and Tx VCO and Fractional-N PLL with fine frequency resolution
- Greater than 85-dB transmit power control
- Support 3-wired serial interface protocol
- 6 x 6mm small leadless package (QFN)

APPLICATIONS

- Single-band CDMA mobile phone

REVISION HISTORY

- **Tentative** version: November, 5, 2008.
- **Tentative** version: January, 28, 2009.
- Preliminary version: March, 12, 2009.
- Preliminary version: March, 23, 2009.

BLOCK DIAGRAM

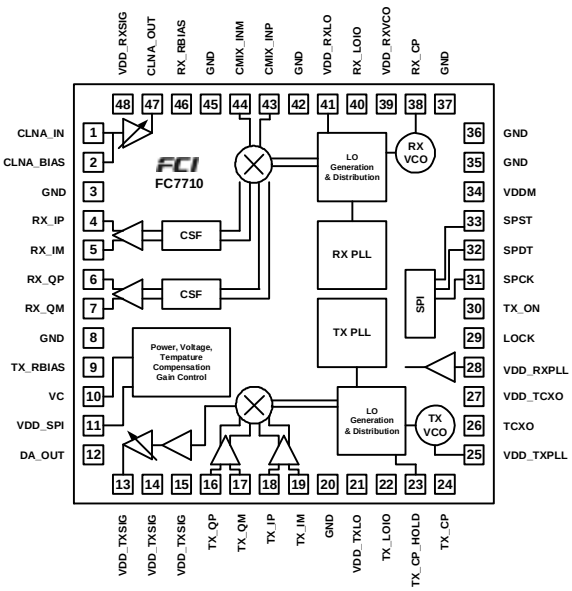

For latest specifications, technical questions and additional product information, visit website or e-mail

FCI Inc.
11th Floor, Kins Tower, 25-1
Jeongja-Dong, Bundang-Gu,
Sungnam City, Gyunggi-do,
463-811, KOREA

Website: http://www.fci.co.kr
E-mail: info@fci.co.kr
Phone: 82-31-711-6444
Fax: 82-31-711-0313