SM3254

USB2.0 Dual-Channel Flash Controller

Overview

The SM3254 is a USB Flash drive controller that combines high compatibility and performance to support single-channel SLC and MLC NAND-type Flash memory in one chip. Based on 0.162µm fabrication technology and low-power consumption considerations, the SM3254 complies with USB2.0 power specifications for bus-powered devices. In conjunction with USB2.0 Flash drive applications, the SM3254 supports high capacity (up to 16 Flash components), "write protection" functionality, PC boot-up from a USB2.0 Flash drive, password protection, and secured partitioning functions.

The SM3254 controller delivers an extremely reliable, high data transfer rate through an 13/24-bit ECC engine to reduce MLC Flash read/write disturbance errors. Combining a 5-3.3V regulator and power-on-rest feature, the SM3254 maximizes efficiency and reduces overall costs. The SM3254 is available in 48-pin LQFN and 64-pin LQFP packages with a manufacturing-ready turnkey solution.

Key Features

- Complete USB2.0 compatibility
- Complies with USB Mass Storage Class specification version 1.0
- Bulk Only transport protocol
- Complies with USB power specifications for bus-powered devices
- Operating systems supported:
  - Windows® 7/Vista/XP/2000/Me/98/98SE
  - Mac OS 9.X/X and above
  - Linux Kernel 2.4 and above
- In System Programming (ISP) firmware update capability
- Supports single channels for Flash memory
- Compatible with SLC or MLC NAND-type Flash and up to 8 Flash components
- Supports 13/24-bit ECC hardware engines for highly error correction
- Supports Windows® Vista Ready Boost function
- Supports VID, PID, serial number, and vendor information updates
- An LED indicates when the USB Flash drive is in Ready/Working mode
- Supports a "Write Protection" security function to protect data
- Integrated 80C51 compatible 8-bit microprocessor with enhanced features
- 12MHz crystal driver circuit
- 1.8 volts low power core operation
- Operates on a single power supply (Vdd = 5.0V or 3.3V)

Note: *Specifications may be changed without prior notice.*

Applications

- USB Flash Drive
- USB Solid State Disk
- Embedded Application
- High-Speed NAND Storage

Target Performance (high-speed)

- SLC sustained read rate: 35 MB/s*
- SLC sustained write rate: 28 MB/s*
- MLC sustained read rate: 30 MB/s*
- MLC sustained write rate: 15 MB/s*

**Figures may vary between test platforms.*

Product Schedule

- 48-pin LQFN and 64-pin LQFP
- 0.162um IC (integrated circuit)

SM3254 Block Diagram

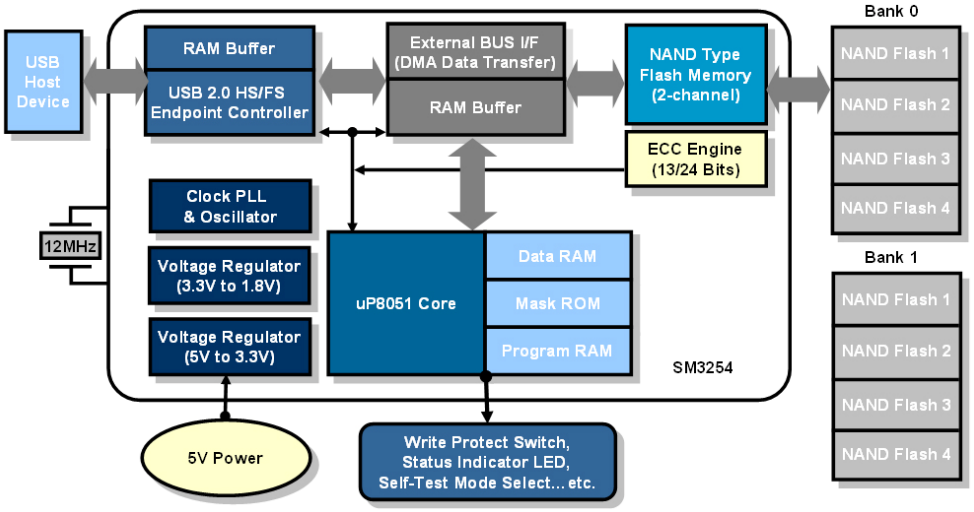

This publication, including all photographs, illustrations and software, is protected under international copyright laws, with all rights reserved. Neither this publication, nor any of the material contained herein, may be reproduced without written consent of the manufacturer.
© Copyright 2009 Silicon Motion, Inc.